# WSU - LOT 4
# DARCY RD & HAWKESBURY RD, WESTMEAD
## STORMWATER CONCEPT PLAN

## NOTES

### GENERAL

1. THE DRAWINGS SHALL BE READ AS REQUIRED IN CONJUNCTION WITH ARCHITECTURAL DRAWINGS
2. ALL DIMENSIONS ARE IN mm UNO. DO NOT SCALE DRAWINGS, USE FIGURED DIMENSIONS
3. THE PROPOSED WORKS DETAILED SHALL BE CONSTRUCTED TO THE REQUIREMENTS OF COUNCIL, GENERALLY AS DETAILED HEREUNDER
4. ALL EXISTING SERVICES SHALL BE VERIFIED FOR DEPTH AND HORIZONTAL POSITION BY PHYSICAL MEANS PRIOR TO EXCAVATION. ANY DISCREPANCIES SHALL BE BROUGHT TO THE SUPERINTENDENTS ATTENTION

### STORMWATER DRAINAGE MATERIALS

5. SELECT FILL SHALL BE MATERIAL OBTAINED FROM EXCAVATION OF THE PIPE TRENCH OR IMPORTED WITH A PARTICLE SIZE FOR ROCK NOT GREATER THAN 75mm OR FOR OTHER THAN ROCK NOT GREATER THAN 150mm
6. IMPORTED FILL SHALL BE EITHER, & GENERALLY CONSIST OF SINGLE SIZED AGGREGATE WITH PARTICLE SIZE NOT GREATER THAN 5mm WRAPPED ALL AROUND WITH GEOTEXTILE FILTER FABRIC OR APPROVED HIGH COMPACTION SAND OR APPROVED CRUSHED ROAD GRAVEL CONFORMING TO RTA FORM 3051 OR SIMILAR
7. CONCRETE SHALL HAVE A SLUM OF 80mm. A MAXIMUM AGGREGATE SIZE OF 20mm & STRENGTH GRADE OF 25mPa (KERBS, EDGE STRIPS & CONCRETE ENCASEMENT) & 32mPa ELSEWHERE
8. ALL PIPES & FITTINGS FOR STORMWATER DRAINAGE SHALL BE AS FOLLOWS UNO ON THE DRAWINGS:

a) UNPLASTISIZED POLYVINYL CHLORIDE (UPVC) WITH SOLVENT WELDED JOINTS FOR DRAINAGE UP TO 300mm

b) FIBRE REINFORCED CEMENT WITH RUBBER RINGS FOR PIPE DIAMETERS GREATER THAN 300mm UNO

c) REINFORCED CONCRETE WHERE REQUIRED BY AS3500 FOR EXCESSIVE DEPTH

d) INSTALL IN ACCORDANCE WITH AUSTRALIAN STANDARD AS3500 EXCEPT WHERE VARIED BY THE CONTRACT DOCUMENTS

9. ALL INGROUND DRAINAGE PIPEWORK SERVING DOWNPIPES SHALL BE MINIMUM 100mm DIAMETER UNO
10. ALL GRATED DRAINS SHALL BE 225mm UNO WIDTH IN TRAFFICABLE AREAS
11. ALL GUTTERS TO BE SIZED AT CONSTRUCTION CERTIFICATION STAGE

### EARTHWORKS AND RESTORATION

12. EXCAVATE TRENCHES & STOCKPILE ALL MATERIAL FOR INSPECTION WITH REGARD TO RE-USE
13. BEDDING MATERIAL SHALL CONSIST OF IMPORTED FILL ONLY. THICKNESS OF BEDDING LAYER SHALL BE 75mm IN O.T.R. & 200mm IN ROCK
14. EMBED ALL PIPES WITH IMPORTED FILL. PROVIDE 200mm SIDE SUPPORT & 150mm OVERLAY ABOVE PIPE CROWN
15. TRENCH FILL ABOVE THE EMBEDMENT ZONE TO THE UNDERSIDE OF THE ROAD PAVEMENT OR FOOTWAY FILL MATERIAL SHALL BE AS FOLLOWS:

UNDER ROADWAY:

TRENCH FILL MATERIAL SHALL CONSIST OF IMPORTED FILL AS SPECIFIED OR EITHER HIGH GRADE COMPACTION SAND OR APPROVED CRUSHED ROAD GRAVEL CONFORMING TO RTA FORM 3051 OR SIMILAR

OTHER THAN ROADWAY:

TRENCH FILL MATERIAL EXCAVATED SHALL CONSIST OF SELECT FILL AS SPECIFIED & SHALL NOT CONTAIN MORE THAN 20% OF STONES OF SIZE BETWEEN 25mm & 150mm AND NONE LARGER THAN 150mm.
PRIOR TO USE OF THE EXCAVATED MATERIAL IT SHALL BE INSPECTED & APPROVED BY THE CONSULTANT

16. COMPACT BEDDING, EMBEDMENT & TRENCH FILL MATERIALS AS FOLLOWS:

EMBEDMENT:

FOR GRANULAR FILL MATERIAL (NON-COHESIVE SOILS) EG: COARSE AGGREGATE FILL, HIGH GRADE COMPACTION SAND, THE DENSITY INDEX (ID) SHALL BE NOT LESS THAN 65%

TRENCH FILL::

FOR GRANULAR MATERIAL (NON-COHESIVE SOILS) THE DENSITY INDEX (ID) SHALL BE NOT LESS THAN 85%

FOR NON-GRANULAR FILL MATERIAL (COHESIVE SOILS) THE DRY DENSITY RATIO (RD) SHALL BE NOT LESS THAN 95%

17. RESTORE ALL TRAFFIC AREAS PER STRUCTURAL ENGINEERS DETAILS OR OTHERWISE AS REQUIRED BY COUNCIL
18. FOR ALL SURFACES OTHER THAN IN TRAFFIC AREAS RESTORE DISTURBED SURFACES TO PRE-EXISTING CONDITIONS UNO ON ARCHITECTURAL OR LANDSCAPE ARCHITECTS DRAWINGS & COMPACT AS SPECIFIED

### INSTALLATION OF PIPE SYSTEM

19. MINIMUM GRADES FOR GRAVITY STORMWATER DRAINAGE SHALL CONFORM TO AS3500 PART 3 AS FOLLOWS, UNO:

1% FOR 100 DIAMETER
0.5% FOR 150 & 225 DIAMETER
0.4% FOR 300mm DIAMETER
0.35% FOR 375mm DIAMETER

20. PIPES SHALL BE TRUE TO GRADES SHOWN & ALIGNED SO THAT THE CENTRES OF THE INLET PIPES INTERSECT WITH THE CENTRE OF THE OUTLET PIPE AT THE DOWNSTREAM FACE OF THE PIT
21. MINIMUM DEPTH OF COVER SHALL BE:
300mm FOR NON-TRAFFICABLE AREAS
450mm FOR TRAFFICABLE AREAS
600mm FOR HEAVY VEHICLE TRAFFIC AREAS
22. BED ALL PIPES FIRMLY & EVENLY ONTO IMPORTED BEDDING FILL MATERIAL
23. LOCATIONS & FIXING OF PIPEWORK SHALL BE SUBJECT TO CO-ORDINATION WITH OTHER DESIGN DISCIPLINES EG: PENETRATIONS THROUGH CONCRETE ELEMENTS

### APPROVALS

24. THE AS CONSTRUCTED WORKS SHALL BE INSPECTED BY COUNCIL BUILDING INSPECTOR OR DESIGN CONSULTANT. MINIMUM 48 HOURS NOTICE SHALL APPLY TO ALL INSPECTIONS
25. COUNCIL ENGINEER TO BE GIVEN 48 HOURS NOTICE OF INTENTION TO COMMENCE CONNECTION TO EXISTING COUNCIL MAIN
26. SUBMIT WORK AS EXECUTED DRAWINGS IN HARD COPY FORMAT. VERIFY ALL CONSTRUCTION WORKS SHOWN
27. CERTIFY THAT THE AS CONSTRUCTED SYSTEM HAS BEEN BUILT IN ACCORDANCE WITH THE APPROVED PLANS ISSUED FOR CONSTRUCTION

## LEGEND

| EXISTING | PROPOSED | |
|---|---|---|
| eSTW | STW | STORMWATER MAIN |
| S | | SEWER DRAINS OR WASTES |
| S | | WASTE LINE |
| SS | SS | SUB-SURFACE DRAINS |
| AGL | AGL | AGL GAS MAIN |

| | | | |
|---|---|---|---|
| NR | NON RETURN VALVE | FP | FLUSHING POINT |
| BT | BUCKET TRAP | JU/CO | JUMP UP TO CLEAR OUT |
| ST | SILT TRAP | AP | ALTERING PIPE |
| TG | TRENCH GRATE | | EXISTING SEWER MAIN HOLE |
| FW | FLOOR WASTE | | STREET FIRE HYDRANT |
| EJ | EXPANSION JOINT | | OVERLAND FLOW PATH |
| CO | CLEAR OUT POINT | | |
| IO | INSPECTION OPENING | | |

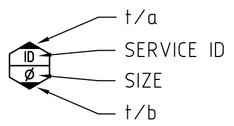


## ABBREVIATIONS

| | | | |
|---|---|---|---|
| eFH | EXISTING FIRE HYDRANT. | MH | MANHOLE. |
| EX | EXISTING | VR | VERTICAL RISER. |
| IO | INSPECTION OPENING | JU | JUMP UP. |
| UPVC | UNPLASTICIZED POLYVINYL CHLORIDE. | AP | ALTERING PIPE. |
| KO | KERB OUTLET | CO | CLEAR OUT. |
| FP | FLUSHING POINT | RWT | RAINWATER TANK |
| RWO | RAIN WATER OUTLET | OSD | ONSITE DETENTION |
| TG | TRENCH GRATE | SWP | STORMWATER PIT |
| HP | HIGH PONT | | |
| RWH | RAINWATER HARVEST | | |
| DP | DOWNPIPE | | |

CERTIFICATE

| No. | REVISION/ISSUE | DATE | BY | CHECKED |
|---|---|---|---|---|
| D | DEVELOPMENT APPLICATION ISSUE | 08.09.17 | NL | NL |
| A | DEVELOPMENT APPLICATION ISSUE | 20.12.16 | NL | NL |


CLIENT
DelCorp Pty Limited
Suite 301, Level 3, 161 Redfern Street, Redfern NSW 2016
Phone: (02) 8665 4100 Fax: (02) 8665 4111
Email: fdelri@delcorp.com.au

ARCHITECT
TURNER
L.7, ONE Oxford Street
Darlinghurst NSW 2010
Australia
T +61 2 8668 0000
F +61 2 8668 0088
turnerstudio.com.au

HYDRAULIC CONSULTANT
Neil Lowry & Associates Pty Ltd
hydraulic & fire services consultants
Suite 3.09, Level 3, 7-9 Gibbons Street, Redfern NSW 2016
Tel: 02 9526 7922
Email: admin@nlapl.com.au
Neil Lowry & Associates Pty Ltd ABN 72 101 872 584


PROJECT
WSU - LOT 4
DARCY ROAD &
HAWKESBURY ROAD
WESTMEAD

DRAWING
STORMWATER CONCEPT
COVER SHEET & LEGEND

| DRAWN | DESIGNED | CHECKED | |
|---|---|---|---|
| KJ | NL | | |
| | | DATE DEC 16 | SCALE NTS@A1 |
| PROJECT 0789 | DWG No. SC00.4 | REV D | STATUS DA |

A1 SHEET

# DRAWING LIST

| | | SCALE |
|---|---|---|
| SC0004 | COVER SHEET & LEGEND - STORMWATER CONCEPT | N.T.S. |
| SC01.4 | DRAWING LIST - STORMWATER CONCEPT | N.T.S. |
| SC02.4 | BASEMENT 4 - STORMWATER CONCEPT | 1:200 |
| SC03.4 | BASEMENT 3 - STORMWATER CONCEPT | 1:200 |
| SC04.4 | BASEMENT 2 - STORMWATER CONCEPT | 1:200 |
| SC05.4 | BASEMENT 1 - STORMWATER CONCEPT | 1:200 |
| SC06.4 | LOWER GROUND - STORMWATER CONCEPT | 1:200 |
| SC07.4 | GROUND FLOOR - STORMWATER CONCEPT | 1:200 |
| SC08.4 | LEVEL 1 - STORMWATER CONCEPT | 1:200 |
| SC09.4 | LEVEL 2-5 - STORMWATER CONCEPT | 1:200 |
| SC10.4 | LEVEL 6 - STORMWATER CONCEPT | 1:200 |
| SC11.4 | LEVEL 7 - STORMWATER CONCEPT | 1:200 |
| SC12.4 | LEVEL 8 - STORMWATER CONCEPT | 1:200 |
| SC13.4 | LEVEL 9 - STORMWATER CONCEPT | 1:200 |
| SC14.4 | LEVEL 10-12 - STORMWATER CONCEPT | 1:200 |
| SC15.4 | LEVEL 13-17 - STORMWATER CONCEPT | 1:200 |
| SC16.4 | LEVEL 18 - STORMWATER CONCEPT | 1:200 |
| SC17.4 | LEVEL 19 - STORMWATER CONCEPT | 1:200 |
| SC18.4 | LEVEL 20 PLANT & ROOF - STORMWATER CONCEPT | 1:200 |
| SC19.4 | LEVEL 21 ROOF - STORMWATER CONCEPT | 1:200 |
| SC20.4 | SEDIMENT CONTROL PLAN - STORMWATER CONCEPT | 1:200 |
| SC21.4 | DETAIL SHEET - STORMWATER CONCEPT | 1:200 |

A1 SHEET

CRITICAL

| No. | REVISION/ISSUE | DATE | BY | CHECKED |
|---|---|---|---|---|
| D | DEVELOPMENT APPLICATION ISSUE | 08.09.17 | NL | NL |
| A | DEVELOPMENT APPLICATION ISSUE | 20.12.16 | NL | NL |


CLIENT

DelCorp Pty Limited

Suite 301, Level 3, 161 Redfern Street, Redfern NSW 2016
Phone: (02) 8665 4100 Fax: (02) 8665 4111
Email: fdelri@delcorp.com.au

ARCHITECT

TURNER

L 7, ONE Oxford Street
Darlinghurst NSW 2010
Australia

T +61 2 8668 0000
F +61 2 8668 0088
turnerstudio.com.au

HYDRAULIC CONSULTANT

Neil Lowry & Associates Pty Ltd
hydraulic & fire services consultants

Suite 3.09, Level 3, 7-9 Gibbons Street, Redfern NSW 2016
Tel: 02 9526 7922
Email: admin@nlapl.com.au
Neil Lowry & Associates Pty Ltd ABN 72 101 872 584


PROJECT

**WSU - LOT 4**
**DARCY ROAD &**
**HAWKESBURY ROAD**
**WESTMEAD**

DRAWING

**STORMWATER CONCEPT**
DRAWING LIST

| DRAWN | DESIGNED | CHECKED | | |
|---|---|---|---|---|
| KJ | NL | | | |
| | | DATE | | SCALE |
| | | DEC 16 | | NTS@A1 |
| PROJECT | DWG No. | REV | STATUS | |
| 0789 | SC01.4 | D | DA | |

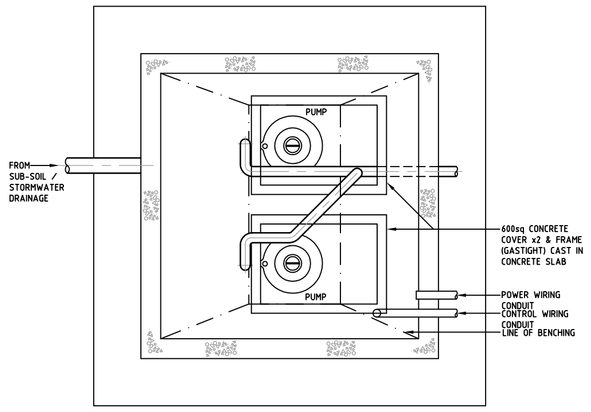


PLAN

## PLAN WITH COVERS REMOVED

SCALE: NTS

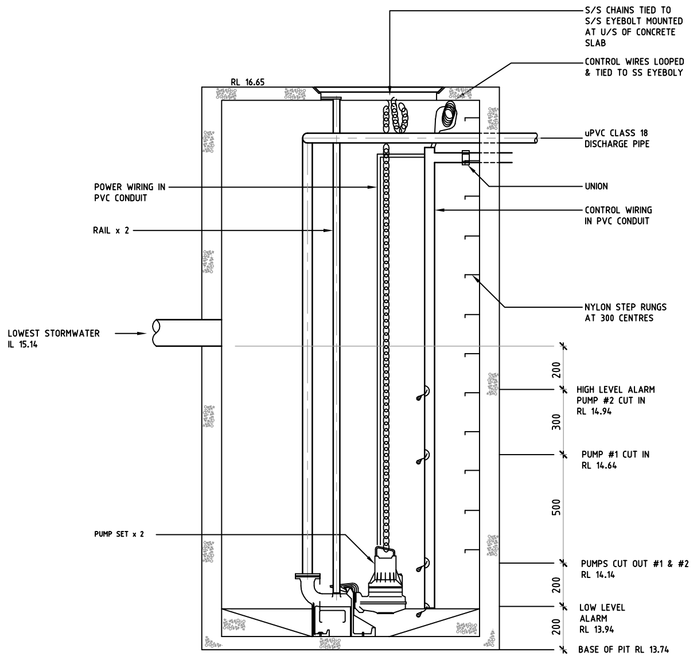


ELEVATION

## DETAIL OF SUB-SOIL PUMP OUT CHAMBER

SCALE: NTS

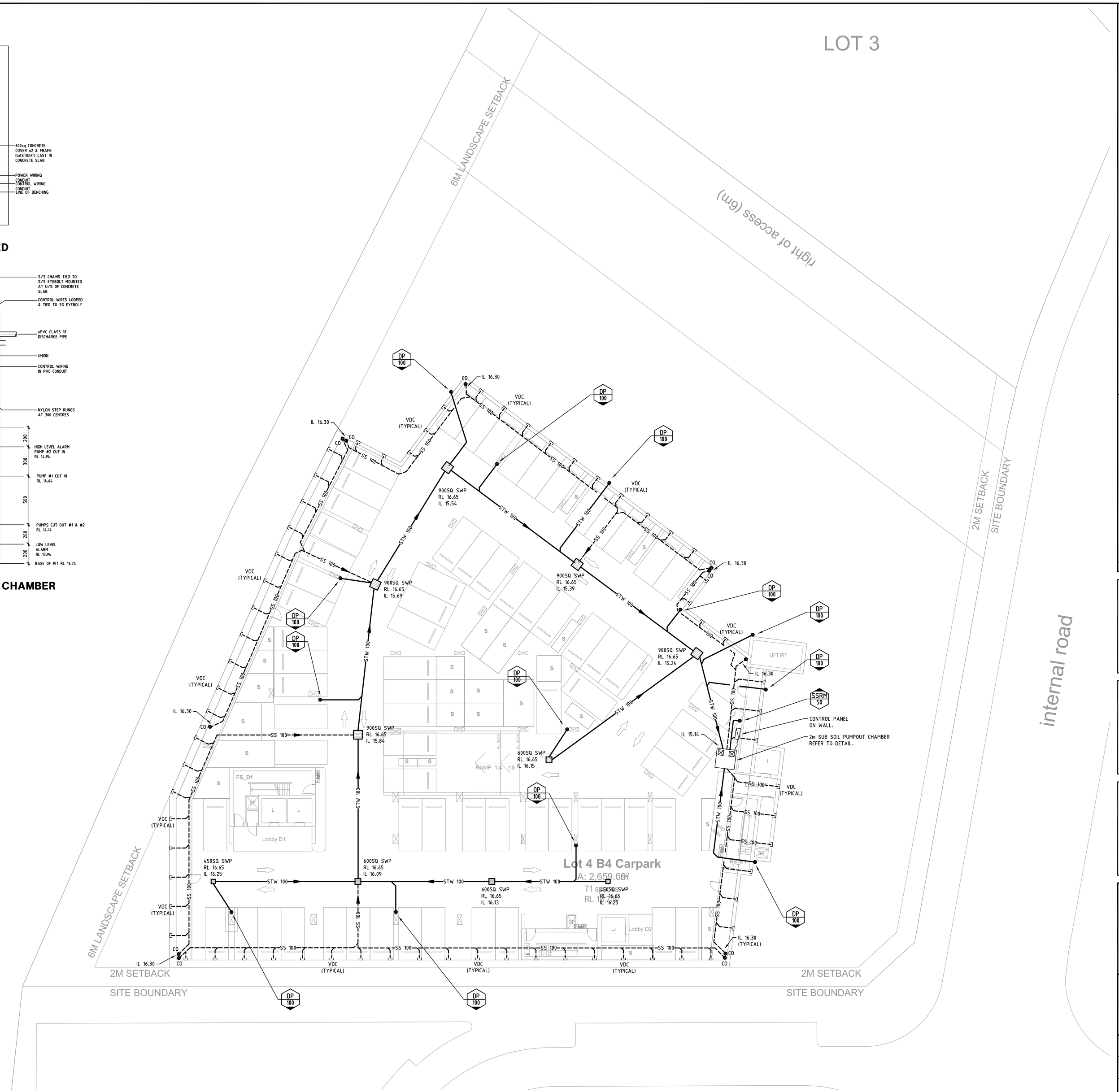


A1 SHEET

| No. | REVISION/ISSUE | DATE | BY | CHECKED |
|---|---|---|---|---|
| D | DEVELOPMENT APPLICATION ISSUE | 08.09.17 | NL | NL |
| A | DEVELOPMENT APPLICATION ISSUE | 20.12.16 | NL | NL |

CLIENT

DelCorp Pty Limited
Suite 301, Level 3, 161 Redfern Street, Redfern NSW 2016
Phone: (02) 8665 4100 Fax: (02) 8665 4111
Email: fdelri@delcorp.com.au

ARCHITECT

TURNER
L 7, ONE Oxford Street
Darlinghurst NSW 2010
Australia
T +61 2 8668 0090
F +61 2 8668 0088
turnerstudio.com.au

HYDRAULIC CONSULTANT

Neil Lowry & Associates Pty Ltd
hydraulic & fire services consultants
Suite 3.09, Level 3, 7-9 Gibbons Street, Redfern NSW 2016
Tel: 02 9526 7922
Email: admin@nlapl.com.au
Neil Lowry & Associates Pty Ltd ABN 72 101 872 584

PROJECT

# WSU - LOT 4 DARCY ROAD & HAWKESBURY ROAD WESTMEAD

DRAWING

# STORMWATER CONCEPT

BASEMENT 4

| DRAWN | DESIGNED | CHECKED | DATE | SCALE |
|---|---|---|---|---|
| KJ | NL | | DEC 16 | 1:200@A1 |

| PROJECT | DWG No. | REV | STATUS |
|---|---|---|---|
| 0789 | SC02.4 | D | DA |

A1 SHEET

| No. | REVISION/ISSUE | DATE | BY | CHECKED |
|---|---|---|---|---|
| D | DEVELOPMENT APPLICATION ISSUE | 08.09.17 | NL | NL |
| A | DEVELOPMENT APPLICATION ISSUE | 20.12.16 | NL | NL |

CLIENT

DelCorp Pty Limited

Suite 301, Level 3, 161 Redfern Street, Redfern NSW 2016
Phone: (02) 8665 4100 Fax: (02) 8665 4111
Email: fdelrl@delcorp.com.au

ARCHITECT

TURNER

L 7, ONE Oxford Street
Darlinghurst NSW 2010
Australia

T +61 2 8668 0099
F +61 2 8668 0088
turnerstudio.com.au

HYDRAULIC CONSULTANT

Neil Lowry & Associates Pty Ltd
hydraulic & fire services consultants

Suite 3.09, Level 3, 7-9 Gibbons Street, Redfern NSW 2016
Tel: 02 9526 7922
Email: admin@nlapl.com.au
Neil Lowry & Associates Pty Ltd ABN 72 101 872 584

PROJECT

**WSU - LOT 4**
**DARCY ROAD &**
**HAWKESBURY ROAD**
**WESTMEAD**

DRAWING

**STORMWATER CONCEPT**
BASEMENT 3

| DRAWN | DESIGNED | CHECKED | DATE | SCALE |
|---|---|---|---|---|
| KJ | NL | | DEC 16 | 1:200@A1 |

| PROJECT | DWG No. | REV | STATUS |
|---|---|---|---|
| 0789 | SC03.4 | D | DA |

CERTIFICATE

A1 SHEET

| No. | REVISION/ISSUE | DATE | BY | CHECKED |
|---|---|---|---|---|
| D | DEVELOPMENT APPLICATION ISSUE | 08.09.17 | NL | NL |
| A | DEVELOPMENT APPLICATION ISSUE | 20.12.16 | NL | NL |

CLIENT

DEICORP Pty Limited

Suite 301, Level 3, 161 Redfern Street, Redfern NSW 2016
Phone: (02) 8665 4100 Fax: (02) 8665 4111
Email: fdeiri@deicorp.com.au

ARCHITECT

TURNER

L 7, ONE Oxford Street
Darlinghurst NSW 2010
Australia

T +61 2 8668 0000
F +61 2 8668 0088
turnerstudio.com.au

HYDRAULIC CONSULTANT

Neil Lowry & Associates Pty Ltd
hydraulic & fire services consultants

Suite 3.09, Level 3, 7-9 Gibbons Street, Redfern NSW 2016
Tel: 02 9526 7922
Email: admin@nlapl.com.au
Neil Lowry & Associates Pty Ltd ABN 72 101 872 584

PROJECT

**WSU - LOT 4 DARCY ROAD & HAWKESBURY ROAD WESTMEAD**

DRAWING

**STORMWATER CONCEPT**
BASEMENT 2

| DRAWN | DESIGNED | CHECKED |
|---|---|---|
| KJ | NL | |

| DATE | SCALE |
|---|---|
| DEC 16 | 1:200@A1 |

| PROJECT | DWG No. | REV | STATUS |
|---|---|---|---|
| 0789 | SC04.4 | D | DA |

CONSTRUCTION CERTIFICATE

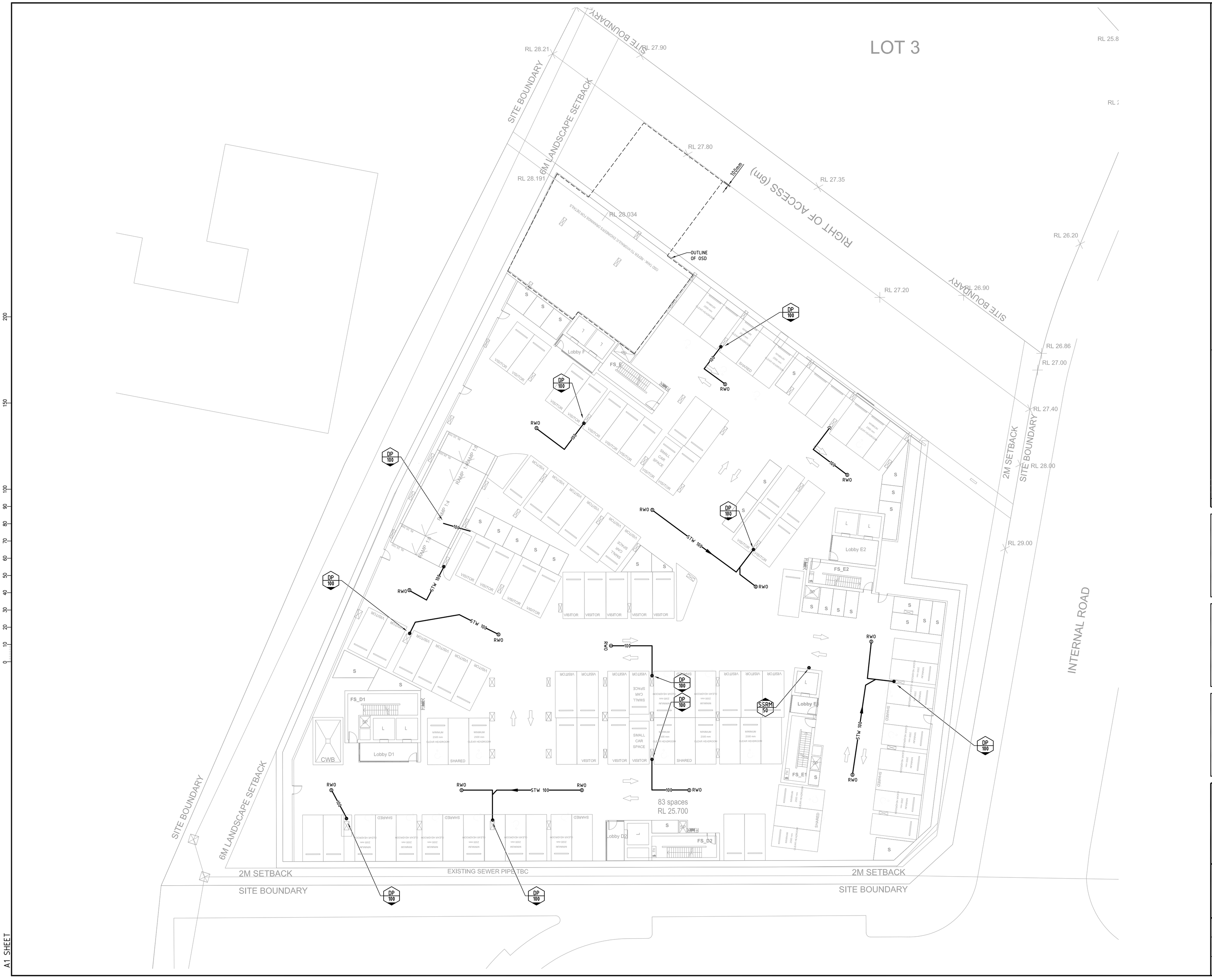


CERTIFICATE

| No. | REVISION/ISSUE | DATE | BY | CHECKED |
|---|---|---|---|---|
| D | DEVELOPMENT APPLICATION ISSUE | 08.09.17 | NL | NL |
| B | DEVELOPMENT APPLICATION ISSUE | 21.07.17 | NL | NL |
| A | DEVELOPMENT APPLICATION ISSUE | 20.12.16 | NL | NL |

CLIENT

DelCorp Pty Limited

Suite 301, Level 3, 161 Redfern Street, Redfern NSW 2016
Phone: (02) 8665 4100 Fax: (02) 8665 4111
Email: fdelri@delcorp.com.au

ARCHITECT

TURNER

L 7, ONE Oxford Street
Darlinghurst NSW 2010
Australia

T +61 2 8668 0088
F +61 2 8668 0088
turnerstudio.com.au

HYDRAULIC CONSULTANT

Neil Lowry & Associates Pty Ltd
hydraulic & fire services consultants

Suite 3.09, Level 3, 7-9 Gibbons Street, Redfern NSW 2016
Tel: 02 9526 7922
Email: admin@nlapl.com.au
Neil Lowry & Associates Pty Ltd ABN 72 101 872 584

PROJECT

# WSU - LOT 4 DARCY ROAD & HAWKESBURY ROAD WESTMEAD

DRAWING

## STORMWATER CONCEPT
BASEMENT 1

| DRAWN | DESIGNED | CHECKED | DATE | SCALE |
|---|---|---|---|---|
| KJ | NL | | DEC 16 | 1:200@A1 |

| PROJECT | DWG No. | REV | STATUS |
|---|---|---|---|
| 0789 | SC05.4 | D | DA |

A1 SHEET

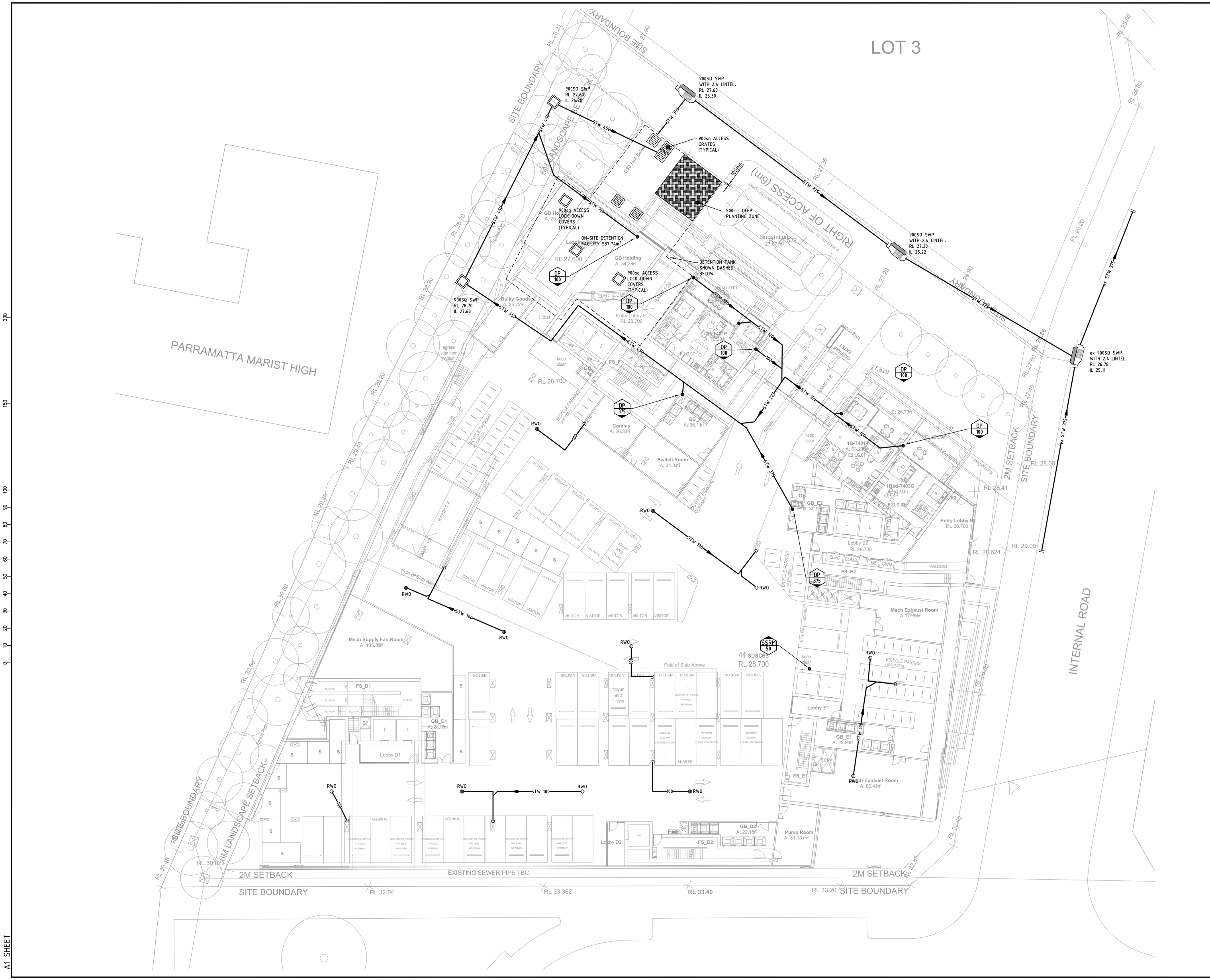


| No. | REVISION/ISSUE | DATE | BY | CHECKED |
|---|---|---|---|---|
| D | REVISED DEVELOPMENT APPLICATION ISSUE | 08.09.17 | NL | NL |
| C | REVISED DEVELOPMENT APPLICATION ISSUE | 29.08.17 | NL | NL |
| B | REVISED DEVELOPMENT APPLICATION ISSUE | 25.08.17 | NL | NL |
| A | DEVELOPMENT APPLICATION ISSUE | 20.12.16 | NL | NL |

CERTIFICATE

CLIENT

DelCorp Pty Limited

Suite 301, Level 3, 161 Redfern Street, Redfern NSW 2016
Phone: (02) 8665 4100 Fax: (02) 8665 4111
Email: fdelri@delcorp.com.au

ARCHITECT

TURNER

L 7, ONE Oxford Street
Darlinghurst NSW 2010
Australia

T +61 2 8668 0000
F +61 2 8668 0088
turnerstudio.com.au

HYDRAULIC CONSULTANT

Neil Lowry & Associates Pty Ltd
hydraulic & fire services consultants

Suite 3.09, Level 3, 7-9 Gibbons Street, Redfern NSW 2016
Tel: 02 9526 7922
Email: admin@nlapl.com.au
Neil Lowry & Associates Pty Ltd ABN 72 101 872 584

PROJECT

# WSU - LOT 4 DARCY ROAD & HAWKESBURY ROAD WESTMEAD

DRAWING

# STORMWATER CONCEPT

LOWER GROUND FLOOR

| DRAWN | DESIGNED | CHECKED | DATE | SCALE |
|---|---|---|---|---|
| KJ | NL | | DEC 16 | 1:200@A1 |

| PROJECT | DWG No. | REV | STATUS |
|---|---|---|---|
| 0789 | SC06.4 | D | DA |

A1 SHEET

CERTIFICATE

| No. | REVISION/ISSUE | DATE | BY | CHECKED |
|---|---|---|---|---|
| D | DEVELOPMENT APPLICATION ISSUE | 08.09.17 | NL | NL |
| A | DEVELOPMENT APPLICATION ISSUE | 20.12.16 | NL | NL |

CLIENT

DeiCorp Pty Limited

Suite 301, Level 3, 161 Redfern Street, Redfern NSW 2016
Phone: (02) 8665 4100 Fax: (02) 8665 4111
Email: fdelli@deicorp.com.au

ARCHITECT

TURNER

L 7, ONE Oxford Street
Darlinghurst NSW 2010
Australia

T +61 2 8668 0000
F +61 2 8668 0088
turnerstudio.com.au

HYDRAULIC CONSULTANT

Neil Lowry & Associates Pty Ltd
hydraulic & fire services consultants

Suite 3.09, Level 3, 7-9 Gibbons Street, Redfern NSW 2016
Tel: 02 9526 7922
Email: admin@nlapl.com.au
Neil Lowry & Associates Pty Ltd ABN 72 101 872 584

PROJECT

# WSU - LOT 4 DARCY ROAD & HAWKESBURY ROAD WESTMEAD

DRAWING

# STORMWATER CONCEPT

GROUND FLOOR

| DRAWN | DESIGNED | CHECKED | DATE | SCALE |
|---|---|---|---|---|
| KJ | NL | | DEC 16 | 1:200@A1 |

| PROJECT | DWG No. | REV | STATUS |
|---|---|---|---|
| 0789 | SC07.4 | D | DA |

A1 SHEET

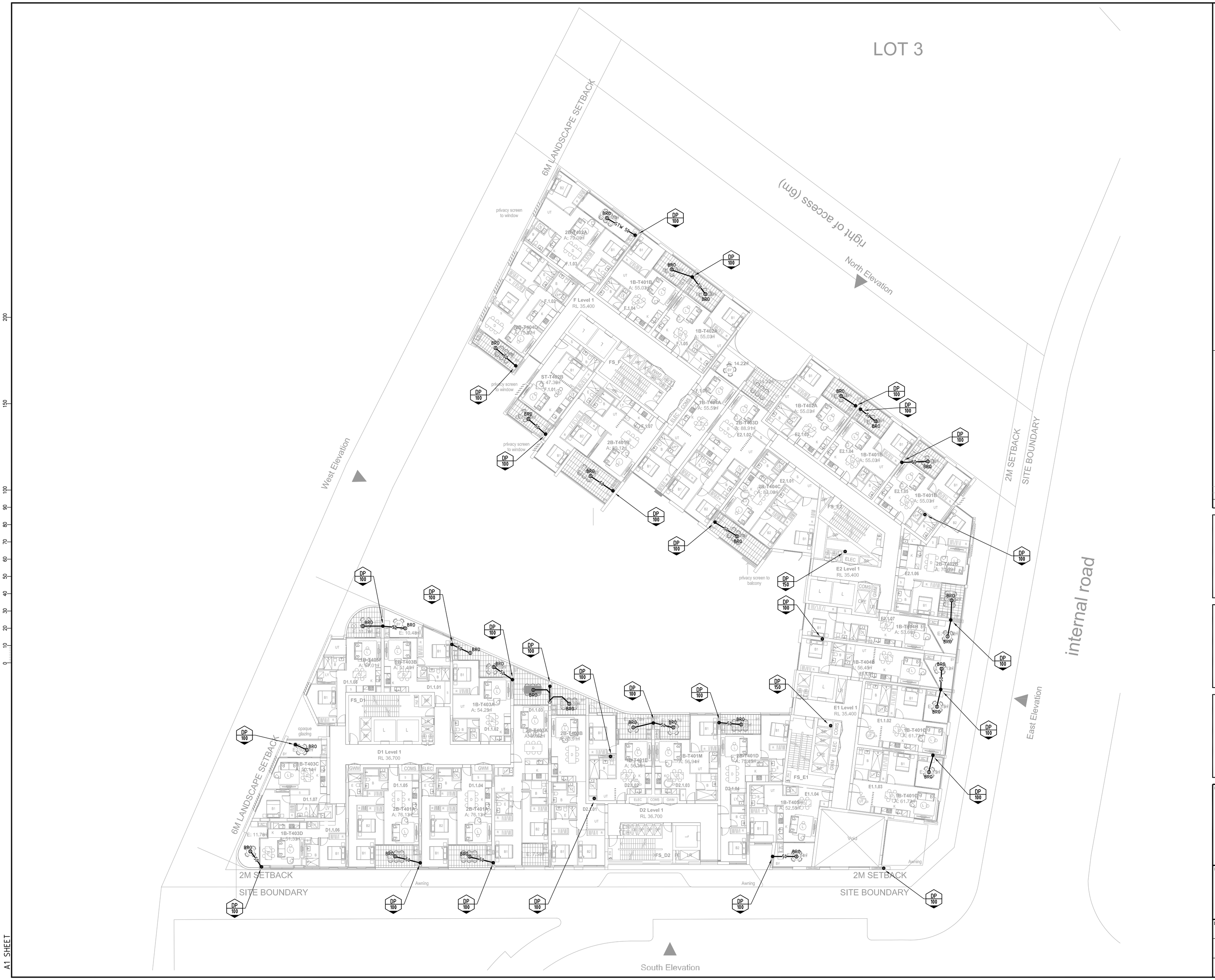


CERTIFICATE

| No. | REVISION/ISSUE | DATE | BY | CHECKED |
|---|---|---|---|---|
| D | DEVELOPMENT APPLICATION ISSUE | 08.09.17 | NL | NL |
| A | DEVELOPMENT APPLICATION ISSUE | 20.12.16 | NL | NL |

CLIENT

DeiCorp Pty Limited

Suite 301, Level 3, 161 Redfern Street, Redfern NSW 2016
Phone: (02) 8665 4100 Fax: (02) 8665 4111
Email: fdeir@deicorp.com.au

ARCHITECT

TURNER

L 7, ONE Oxford Street
Darlinghurst NSW 2010
Australia

T +61 2 8668 0000
F +61 2 8668 0088
turnerstudio.com.au

HYDRAULIC CONSULTANT

Neil Lowry & Associates Pty Ltd
hydraulic & fire services consultants

Suite 3.09, Level 3, 7-9 Gibbons Street, Redfern NSW 2016
Tel: 02 9526 7922
Email: admin@nlapl.com.au
Neil Lowry & Associates Pty Ltd ABN 72 101 872 584

PROJECT

**WSU - LOT 4**
**DARCY ROAD &**
**HAWKESBURY ROAD**
**WESTMEAD**

DRAWING

**STORMWATER CONCEPT**
LEVEL 1

| DRAWN | DESIGNED | CHECKED | DATE | SCALE |
|---|---|---|---|---|
| KJ | NL | | DEC 16 | 1:200@A1 |

| PROJECT | DWG No. | REV | STATUS |
|---|---|---|---|
| 0789 | SC08.4 | D | DA |

A1 SHEET

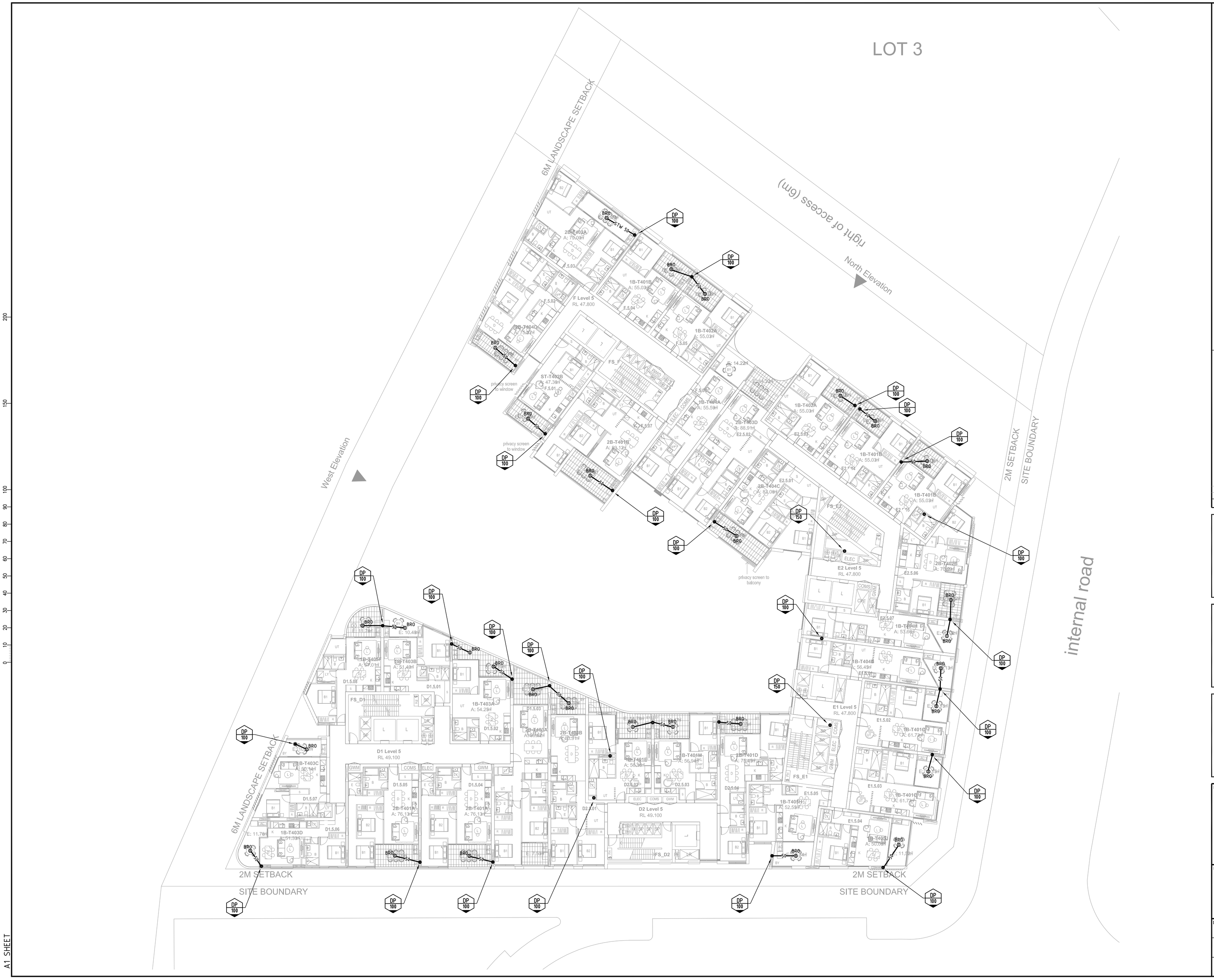


CERTIFICATE

| No. | REVISION/ISSUE | DATE | BY | CHECKED |
|---|---|---|---|---|
| D | DEVELOPMENT APPLICATION ISSUE | 08.09.17 | NL | NL |
| A | DEVELOPMENT APPLICATION ISSUE | 20.12.16 | NL | NL |

CLIENT

DelCorp Pty Limited

Suite 301, Level 3, 161 Redfern Street, Redfern NSW 2016
Phone: (02) 8665 4100 Fax: (02) 8665 4111
Email: fdelri@delcorp.com.au

ARCHITECT

TURNER

L 7, ONE Oxford Street
Darlinghurst NSW 2010
Australia

T +61 2 8668 0099
F +61 2 8668 0088
turnerstudio.com.au

HYDRAULIC CONSULTANT

Neil Lowry & Associates Pty Ltd
hydraulic & fire services consultants

Suite 3.09, Level 3, 7-9 Gibbons Street, Redfern NSW 2016
Tel: 02 9526 7922
Email: admin@nlapl.com.au
Neil Lowry & Associates Pty Ltd ABN 72 101 872 584

PROJECT

**WSU - LOT 4**
**DARCY ROAD &**
**HAWKESBURY ROAD**
**WESTMEAD**

DRAWING

**STORMWATER CONCEPT**
LEVEL 2 - 5

| DRAWN | DESIGNED | CHECKED | DATE | SCALE |
|---|---|---|---|---|
| KJ | NL | | DEC 16 | 1:200@A1 |

| PROJECT | DWG No. | REV | STATUS |
|---|---|---|---|
| 0789 | SC09.4 | D | DA |

A1 SHEET

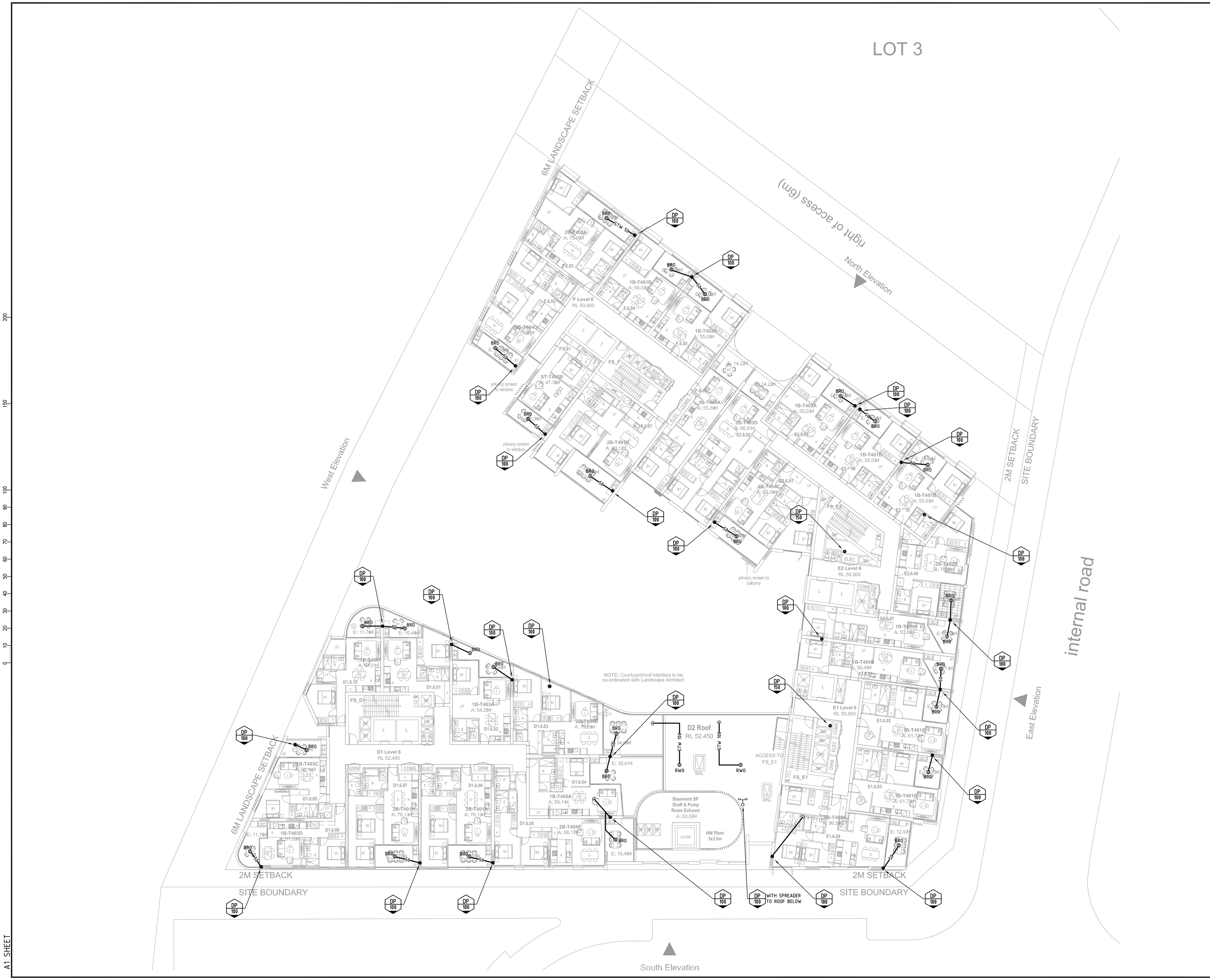


CERTIFICATE

| No. | REVISION/ISSUE | DATE | BY | CHECKED |
|---|---|---|---|---|
| D | DEVELOPMENT APPLICATION ISSUE | 08.09.17 | NL | NL |
| A | DEVELOPMENT APPLICATION ISSUE | 20.12.16 | NL | NL |


CLIENT

DelCorp Pty Limited

Suite 301, Level 3, 161 Redfern Street, Redfern NSW 2016
Phone: (02) 8665 4100 Fax: (02) 8665 4111
Email: fdelri@delcorp.com.au

ARCHITECT

TURNER

L 7, ONE Oxford Street
Darlinghurst NSW 2010
Australia

T +61 2 8668 0099
F +61 2 8668 0088
turnerstudio.com.au

HYDRAULIC CONSULTANT

Neil Lowry & Associates Pty Ltd
hydraulic & fire services consultants

Suite 3.09, Level 3, 7-9 Gibbons Street, Redfern NSW 2016
Tel: 02 9526 7922
Email: admin@nlapl.com.au
Neil Lowry & Associates Pty Ltd ABN 72 101 872 584


PROJECT

# WSU - LOT 4 DARCY ROAD & HAWKESBURY ROAD WESTMEAD

DRAWING

# STORMWATER CONCEPT

LEVEL 6

| DRAWN | DESIGNED | CHECKED | DATE | SCALE |
|---|---|---|---|---|
| KJ | NL | | DEC 16 | 1:200@A1 |

| PROJECT | DWG No. | REV | STATUS |
|---|---|---|---|
| 0789 | SC10.4 | D | DA |

A1 SHEET

CERTIFICATE

| No. | REVISION/ISSUE | DATE | BY | CHECKED |
|---|---|---|---|---|
| D | DEVELOPMENT APPLICATION ISSUE | 08.09.17 | NL | NL |
| A | DEVELOPMENT APPLICATION ISSUE | 20.12.16 | NL | NL |


CLIENT
DeiCorp Pty Limited
Suite 301, Level 3, 161 Redfern Street, Redfern NSW 2016
Phone: (02) 8665 4100 Fax: (02) 8665 4111
Email: fdeifi@deicorp.com.au

ARCHITECT
TURNER
L 7, ONE Oxford Street
Darlinghurst NSW 2010
Australia
T +61 2 8668 0000
F +61 2 8668 0088
turnerstudio.com.au

HYDRAULIC CONSULTANT
Neil Lowry & Associates Pty Ltd
hydraulic & fire services consultants
Suite 3.09, Level 3, 7-9 Gibbons Street, Redfern NSW 2016
Tel: 02 9526 7922
Email: admin@nlapl.com.au
Neil Lowry & Associates Pty Ltd ABN 72 101 872 584


PROJECT
**WSU - LOT 4 DARCY ROAD & HAWKESBURY ROAD WESTMEAD**

DRAWING
**STORMWATER CONCEPT**
LEVEL 7

| DRAWN | DESIGNED | CHECKED | DATE | SCALE |
|---|---|---|---|---|
| KJ | NL | | DEC 16 | 1:200@A1 |

| PROJECT | DWG No. | REV | STATUS |
|---|---|---|---|
| 0789 | SC11.4 | D | DA |

A1 SHEET